Commercial Product Ownership Guide

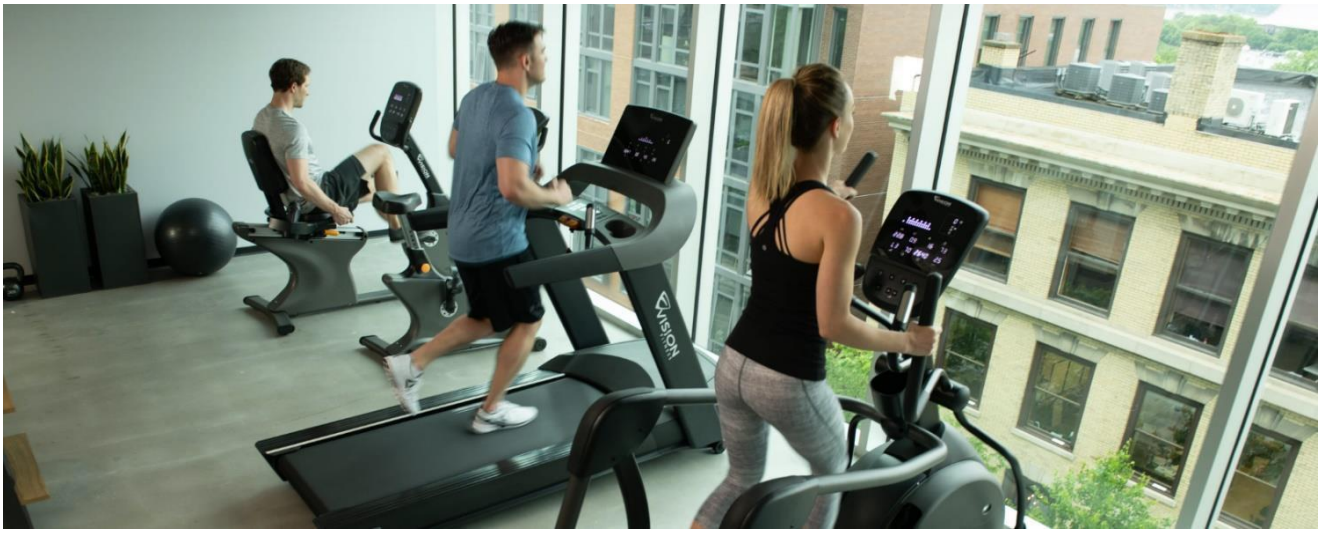

Fitness equipment requires some adjustments and maintenance that are part of owning or leasing equipment. These adjustments and maintenance are not part of your equipment's warranty, nor are they defects in the equipment. This guide will provide you with information on how to perform these adjustments and the maintenance required.

Table of Contents

Leveling Equipment
Treadmills
Ascent & Ellipticals
Bikes
Strength

General Information
Securing Strength Equipment
Support Materials
Product Serial Numbers
Technical Support

Care, Adjustments, and Quick Repairs
Tools and Supplies
Treadmill Running Belt Adjustments
Guide Rod Lubrication
Strength Cable Bolt Engagement
Strength Cable Tensioning
Functional Trainer - Cable Routing
Identifying Damaged Cables
Determine Strength Pad Damage
Strength Pad Replacement
Repairing Paint Chips and Dings
Repairing Peeling Decals/Stickers
Reinstalling Loose or Installing Missing Hardware

Leveling Equipment

Treadmills

Tools needed: Adjustable wrench.

It is important to start with the leveling feet all the way up (turn clockwise). Once the unit is in place, if the unit is not level, adjust the leveling feet by turning counterclockwise. Tighten the jam nut on the leveling feet with an adjustable wrench.

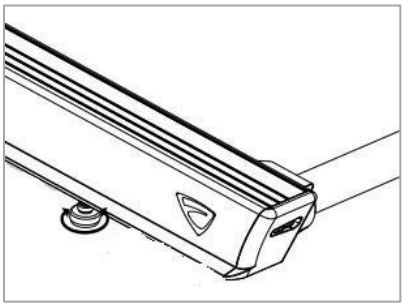

Ascent Trainers & Ellipticals

Tools needed: Adjustable wrench.

It is important to start with the leveling feet all the way up into the frame, so the frame rests on the floor. If the unit is not level at that point, adjust the leveling feet as needed by loosening the nut at the base of the leveler to allow the leveler to rotate. Now rotate the leveler to the left or right until the unit is stable. Lock the adjustment by tightening the nut against the support tube.

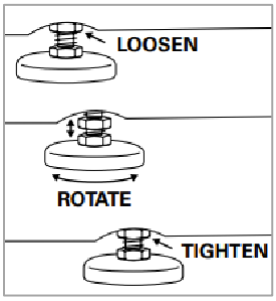

Upright & Recumbent Bikes

It is important to start with the leveling feet all the way up into the frame, so the frame rests on the floor. If the unit is not level at that point, adjust the leveling feet as needed by loosening the wing nut at the base of the leveler to allow the leveler to rotate. Now rotate the leveler to the left or right until the Bike is stable. Lock the adjustment by tightening the wing nut against the rear foot support. and wrench.

Strength Equipment

Composite leveling shims can be used to help level equipment when the floor is not level. Another tip is to loosen your frame bolts and give the machine a shake if possible. This may adjust the frame pieces a bit allowing it to sit better on the floor. Tighten all bolts once you are done.

Securing Strength Equipment

Vision Fitness recommends that all stationary strength equipment be secured to the floor or wall to stabilize equipment and eliminate rocking or tipping over. Vision requires specific pull-out force requirements shown below. Use a licensed contractor to ensure the required retention force is met.

All Flooring

- Each anchoring fastener must withstand 3.3 kN (750 LBS) pull-out force from the floor.
- Anchor the exercise equipment at all provided locations.
- Understand where all bolt-down points are located on the exercise equipment and mark the locations prior to drilling holes into the floor.

Wood/Tile/Rubber Over Concrete Sub-floor

- Understand the thickness of the flooring material. Add this height to the overall length of the anchoring fastener when selecting fastener length to ensure proper embedded depth into concrete flooring.

Wall Mounting – Concrete or Wood Studs

- Each anchoring fastener must withstand 2.2 kN (500 LBS) pull-out force from the wall.
- Anchor the exercise equipment at all provided wall locations.
- When calculating the required overall length of the anchoring fastener to ensure proper embedded depth into the wall, be sure to account for the thickness of the dry wall/sheet rock, as well as the thickness of any mounting plate or mounting hardware, such as hardware used to span the distance between wall studs (such as Unistrut).

Treadmill Running Belt Adjustments

Tensioning

The running belt must be checked for proper tension and alignment (centering). Temperature and humidity can cause the belt to stretch at different rates. If the belt starts to slip or is drifting to one side of the running deck, follow the steps below to make the adjustment needed.

The two 8mm hex head bolts in the end caps adjust the rear roller position. To move the roller out (closer to you), turn both clockwise. This will add tension to the running belt. In turn, adjusting the 2 bolts counterclockwise will move the roller in, removing tension from the running belt. It's important to adjust each bolt the same amount of turns to keep the belt centered on the running deck. It's recommended to make ¼ to ½ turns at a time when adjusting.

Procedure:

1. Press Go on the treadmill and adjust speed to 3mph/4.8kph.
2. Walk on the treadmill belt. Once you are comfortable and balanced, stomp your foot on the belt. You are emulating a runner with a heavy foot. Does the belt stop?
   a. If yes, tension needs to be added. Do this by using the 8mm Allen key to turn both roller bolts clockwise ¼ turn. Repeat Step 2
   b. If not, no adjustments are needed, meaning the belt is tensioned properly and the process is complete.

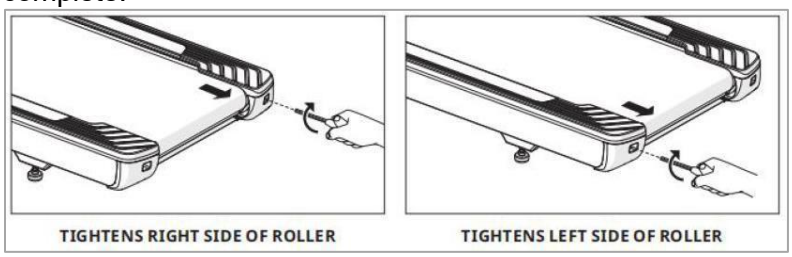

Alignment (Centering)

The two 8mm head bolts in the end caps adjust the rear roller position. To align the belt to the center of the running deck, turn the bolt on the side that the belt moved and turn clockwise. In other words, if you want to move the belt to the right, turn the left bolt counterclockwise (see image below). A ¼ - ½ turn will move the belt quite a bit.

Procedure:

1. Press Go on the treadmill and adjust speed to 3mph/4.8kph.
2. Move/adjust the belt by turning the roller bolts clockwise or counterclockwise as described above.
3. Watch the belt move to the center of the deck (increasing the speed allows the belt to adjust left or right quicker).
4. Repeat until the belt is centered on the deck.

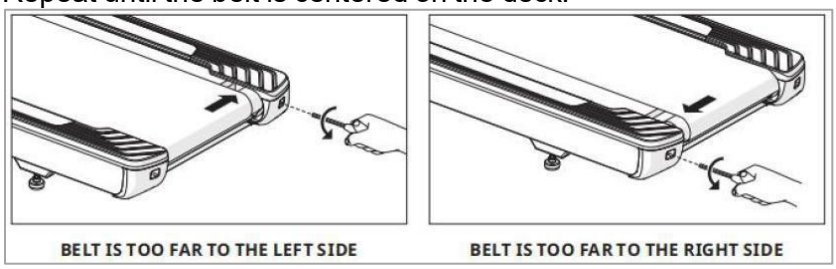

Guide Rod Lubrication

Vision Fitness requires the PTFE based non-aerosol lubricants

Note: PTFE is Polytetrafluoroethylene (Teflon)

Procedure:

1. With a clean rag, wipe the guide rods and top of the weight stack so they are free of dirt and dust.
2. Spray a different rag with the required lubricant and wipe up and down the guide rod gently.
3. Holding the lubricant bottle 1”-2” from the top weight plate bushings, spray a small amount of lubricant between the bushing and the guide rod. Allow the lubricant to run down the guide rod inside the weight stack.
4. Get on the unit and with a light weight, do a few reps. Listen for noise and feel for any friction. Repeat Step 4 or 5 as necessary.
5. Wipe any overspray off the top weight plate.

Strength Cable Bolt Engagement

Strength cables may have different size cable bolts that connect to the top plate or head plate adapter on weight stacks. For this reason, it is important to follow these steps when tensioning cables to ensure your cable has enough engagement to not be a safety concern.

Remove and measure the cable bolt. Measure from the top of the bolt head to the bottom of the bolt. Remember the bolt length as you screw the bolt into the head plate adapter/sleeve (axle). **A minimum of ½” (13mm) must be engaged at all times.**

Example: *The bolt measures 2 ½” (63.5mm) in length (top of bolt head to bottom of threads). Attached the cable bolt to the head plate adapter/sleeve (axle) by screwing it down so 2” (51mm) of the bolt is still showing. From there you will check the tension of your cable. If the cable needs tension, you will screw the bolt down giving it further engagement. If it is too tight and there is no other way to adjust tension (see tensioning procedures in the following pages) you must replace the cable. Do not unscrew to reduce the required ½” (13mm) of engagement.*

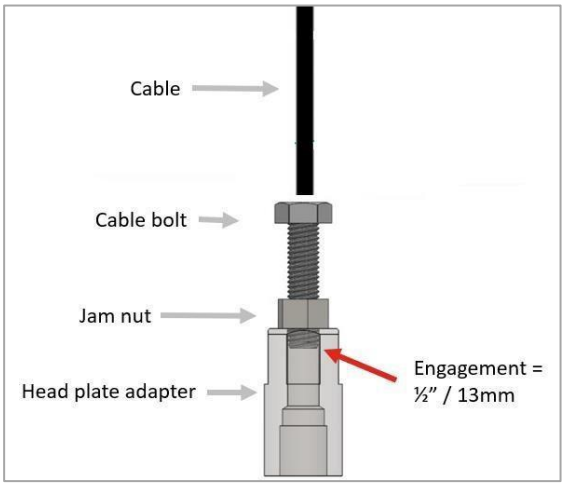

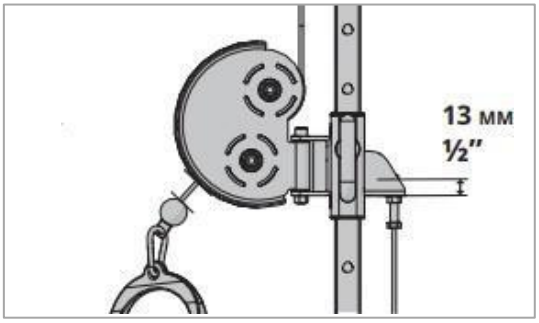

Strength Cable Tensioning

Cables can stretch over their life. It's important to check for proper tension and inspect for damage. Without proper tension, users will lose some range of motion and excess wear to the cables can occur.

Single Stations

Check for Proper Tension:

1. Unpin the weight stack pin from the stack.
2. **From the midway point of the cable bolt and top of weight stack,** use your finger to move the cable from side to side. You should see no more than ½" (13mm) of deflection (about the width of your finger) before the top weight plate starts to move or you feel resistance from the cable.
3. If you have more than ½" (13mm) of deflection, follow the tensioning procedure on the following pages.

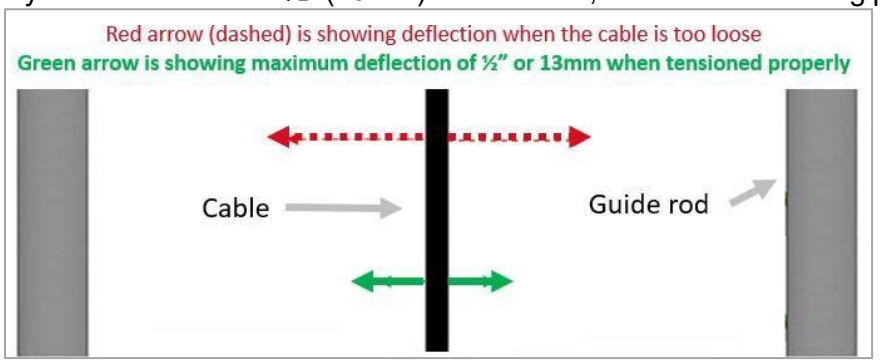

Tensioning Procedure:

1. Unpin the weight stack pin from the stack.
2. Remove the cable bolt from the head plate adapter.
3. Turn down the cable bolt so ½" (13mm) of the bolt is engaged into the head plate adapter (see image below)
4. Check cable tension. If you have no more than ½" (13mm) deflection the cable is tensioning properly (see checking for proper tension procedure above)
   - If you have too much deflection, turn the cable bolt down a few turns and check tension again. Do this until proper deflection is achieved.
5. Tighten jam nut down the cable bolt so it is tight to the head plate adapter. You must secure it with a wrench. Finger tight is not good enough.
6. Use the weight stack pin and pin 50-60 lbs. then perform 5-7 reps to set/stretch the cable.
7. Check for proper tension
8. Check to make sure the weight stack pin goes into each weight plate. If the pin touches the bayonet, that is fine as long as the pin can be inserted completely.
   - If not, loosen the jam nut on the cable bolt and turn out 1 thread then recheck.

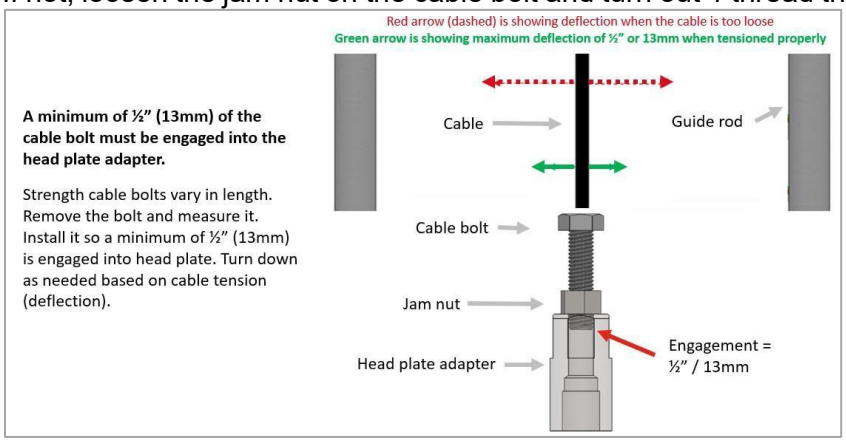

Functional Trainers

Check for Proper Tension:

1. Proper tension should leave **20mm of clearance** at the widest point on the pulley guard as pictured below.

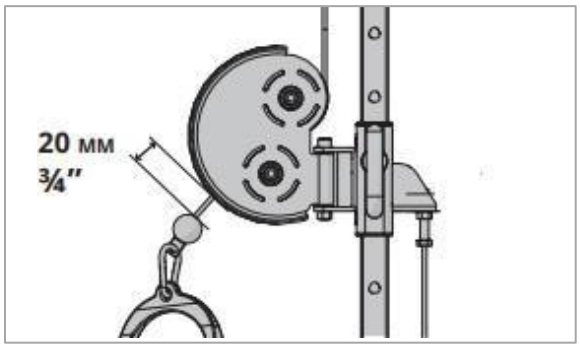

Cable Tensioning Procedure:

1. Install the bolt to ½" (13mm) of engagement to the pulley carriage.
2. Check the cable ball end measurement. Proper tension should leave ¾" (20mm) of clearance at the widest point on the pulley guard.
3. Adjust the cable bolt down as needed. Always ensure to tighten the jam nut with a wrench when you are done.

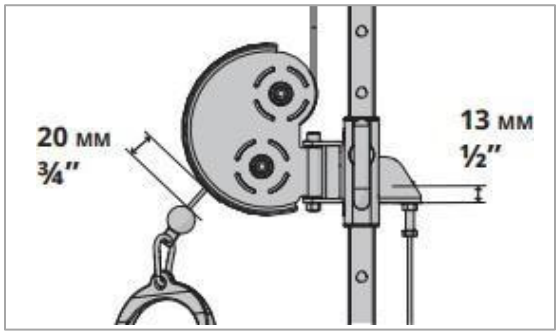

Functional Trainer - Cable Routing

The cable length should be 8265mm. If unit was manufactured prior to July 2021, the cable was 8230mm and should be changed to this longer cable.

1. Remove pulley 7 using a 5mm Allen key and 13mm socket and wrench. Be careful not to lose the spacers on each side of the pulley. They may fall when you remove the pulley.
2. Starting at #1 (Figure 1), install the cable bolt to the adjustable pulley. Do not tighten the bolt jam nut.
3. Route the cable as shown (Figure 1) ensuring that the cable is sitting on each pulley and not routed over cable keepers.
4. Re-install pulley 7.
5. Install the Cable Protection Components
6. Secure the carabiner to the cable head with a zip tie.
7. See Cable Tensioning Procedure to properly set the cable tension.

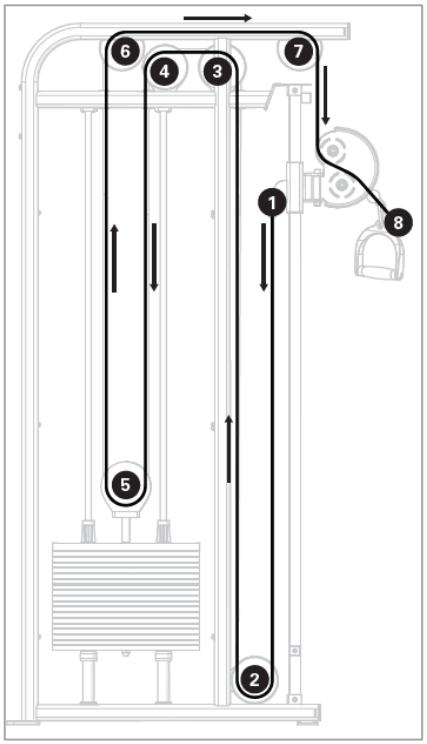

Figure 1

Identifying Damaged Cables

It is important for a facility to check cable conditions weekly. If any of the following are noticed, please put the unit “out of order” and contact Vision Fitness for a replacement cable.

Fractures:

Casing can crack or fracture under strains during use. Any crack in the casing merits cable replacement even if no wire rope is exposed. Be especially observant for fractures near the components on the cable assembly.

Twisting/Binding:
Inspect casing to ensure wire rope is not twisting within its casing. Any sign of the cable twisting should be replaced immediately.

Bulging:
Internal wire rope strands can break within and coil causing a bulge to appear. Cable should retain same outside diameter throughout.

Frayed/Exposed Wire:
Any exposed wire rope protruding through the casing or at either end.

Flattened:
A section of cable is compressed and will not retain its shape (outside diameter).

Bent:
Cable has 'kink' and prohibits cable from laying straight. Wire rope may be unraveling beneath casing and is compromised warranting replacement.

Ends Separating:
Watch for component end of cable to pull away from cable assembly - look for exposed wire rope. Often times the oil from inside the cable jacket will start to leak out which can cause the cable to become brittle over time.

Damaged Cable Protection Components:
The cable protection components help protect the cable. If access wear is seen, replace components as shown below.

Functional Trainer Cable Protection Components

If damage to the **stain relief** is found, contact Customer Technical Support, and request a replacement. Installing this is very simple. See the following assembly instructions.

A	Ball stop
B	Strain relief
C	Eyelet
D	Locking screw

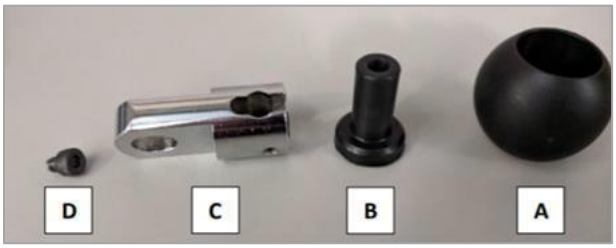

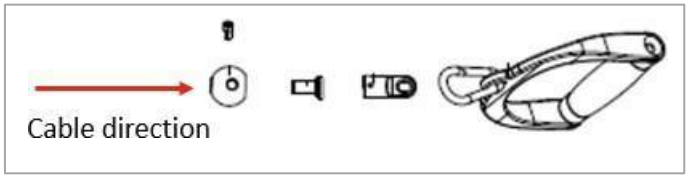

Assembly Instructions

1. Slide the ball stop and then the strain relief onto the cable. The strain relief fits inside the ball stop and extends out the other side.

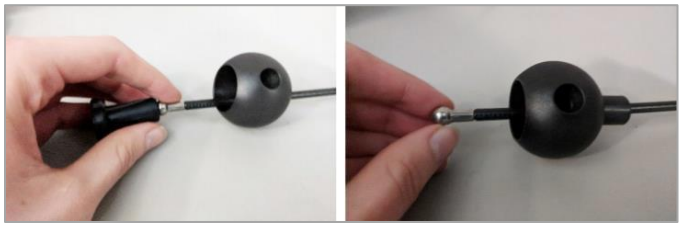

2. Place the cable end into the eyelet end fitting. Pull the ball up into the end fitting and line up the screw holes on the ball and fitting.

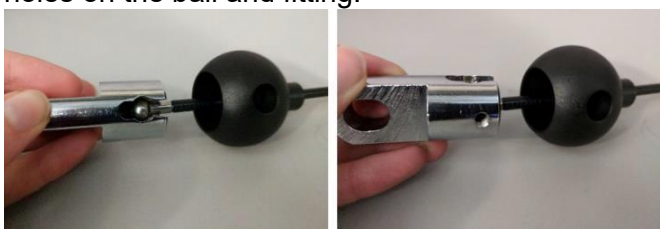

3. Apply Vibra-Tite thread locker (red) to the bolt. Next, use a 4mm Allen wrench to attach the socket head screw to secure the assembly.

Excessing Strength Pads for Wear

Tier 1: Examples of pads not eligible for replacement under warranty. These are examples of pads that have begun to show signs of wear. While this wear does show some cosmetic issues, the pads are still functional and do not impact user experience. Customers may purchase new pads.

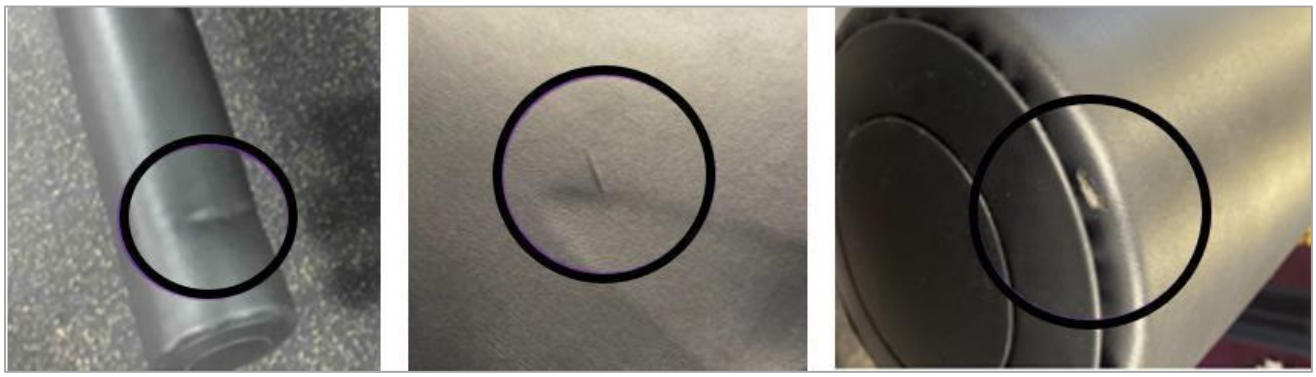

Tier 2: Examples of pads eligible for replacement under warranty – a tear in the pad constitutes replacement.

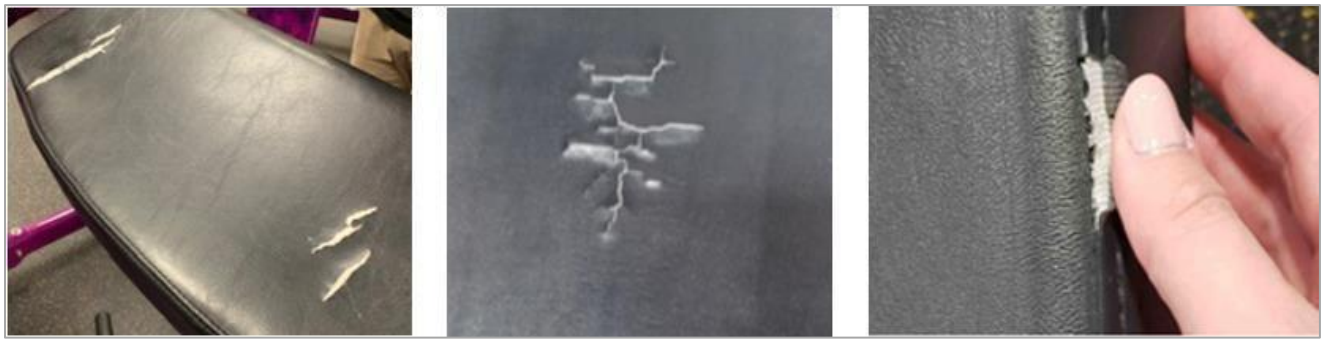

Strength Pad Replacement

Order the pad you need by contacting Customer Technical Support. Follow the steps below to replace a pad. For expedited service, the facility will be asked to install the pad.

To replace a pad:

1. Remove the old pad by removing the bolts holding it to the frame.
2. Install new pad reusing the bolts. Apply Vibra-Tite blue thread locker to the pad bolts and tighten the bolts so they are snug (hand tight then a turn with the wrench until snug or 10 N-m / 7 ft-lbs. is achieved). DO NOT overtighten as you can damage the pad threads.

Repairing Paint Chips and Dings

Equipment will get dings and chips on painted surfaces. Repairing this damage to the paint is important to keep your equipment looking new. If you notice this in your facility, contact Vision Fitness and ask for our Service Bulletin Repairing Damaged Paint and/or Rust which will show you what you will need and includes step-by-step instructions showing you how to make these repairs. Scan the QR code below to see the instructional video or copy the URL (https://youtu.be/DwrlXkzq8wE) and paste it into a web browser.

Always supply the machine serial number so the correct paint color is ordered.

Repairing Peeling Decals/Stickers

Decals and stickers may begin to peel over time. This is caused by liquid getting behind and disrupting the adhesive.

Process:

1. Carefully pull back the edges of the decal/sticker that is peeling to expose the back side.
2. Use the Plastruct Plastic Weld applicator to apply a small amount of the adhesive to the edges of the decal/sticker.
3. Press the decal/sticker back to the equipment.
4. Using your hand, gently rub the edges of the decal/sticker to adhere.

Reinstalling Loose or Installing Missing Hardware

Vision will cover parts and labor in accordance with your warranty for any loose/missing hardware internal to the unit (i.e., not visible, hardware is located under a shroud/cover).

Vision will cover parts and labor in accordance with your warranty for 30 days for any loose/missing hardware external to the unit (i.e., visible without removing a shroud/cover). After 30 days, labor will be the responsibility of the facility as product ownership.

Installing Missing Hardware
If you find hardware (bolts, nuts, washers, and screws) missing, contact Vision CTS to order and let them know the machine serial number and what is missing. Pictures always help to ensure the correct hardware is ordered.

It is best to do this repair at the end of the day as the facility slows down as it may take 24 hours for the Vibra-Tite to cure/set.

1. Apply Vibra-Tite red thread locker to the bolt threads.
2. Tighten the bolt.

Reinstalling Loose Hardware
As equipment settles to the floor after being relocated and general use, frame bolts may begin to loosen. If this is noticed, follow the below steps to secure the bolt. It is best to do this repair at the end of the day as the facility slows down as it may take 24 hours for the Vibra-Tite to cure/set.

1. Loosen the bolt in question to expose the bolt threads.
2. Apply Vibra-Tite red thread locker to the bolt threads.
3. Tighten the bolt.

Support Materials

The documents listed below can be requested by contacting Vision Technical Support.

Cleaners, Disinfectants, and Lubricants Guide
Using non-approved disinfectants and cleaners may cause rust or corrosion on Vision Fitness products and may void your product's warranty.

Preventive Maintenance Checklists
See manufacturer-recommended tasks for all your Vision Fitness product.

- Cardio Product – Cleaning and Maintenance Checklist
- Strength Product – Cleaning and Maintenance Checklist

Product Serial Numbers

Matrix requires a serial number to identify the model of equipment you have, as well as to make sure we are providing you with accurate information that is specific to your machine. The chart below will assist you in locating the serial number on each machine.

Machine	Console	Frame
Treadmill	Back cover	Elevation rack at front of unit or under motor cover
All other cardio	Back cover or under earphone plug	Front stabilizer or under console mast boot
Strength Single Station		Rear below weight stack & inside of weight stack
Functional Trainer		Front below weight stack

Vision Technical Support

Contact your local Vision dealer or visit your country's Vision Fitness website.

For US and Canada customers: https://www.visionfitness.com/us/eng/contact-us

Tools and Supplies

Tools and Supplies	
Long shaft Allen keys with ratcheting wrench Allen key sizes: 3mm, 4mm, 5mm, 6mm & 8mm	
Metric socket set with ratcheting wrench Socket size up to 17mm	
Adjustable wrench Size: medium	
#2 Phillips screwdriver Size: long and short shaft	
Super Lube with PTFE - pump spray Tri-Flow with PTFE - pump spray	

Vibra-Tite blue thread locker	
Vibra-Tite red thread locker	
Plastruct Plastic Weld w/applicator 2oz Bottle	